REVISION HISTORY			
REV.	DESCRIPTION	DATE	DRAWN BY
1	ORIGINAL PRINT	10/9/2018	N. LAWRENCE
2	UPDATED TO AMDS-1	5/23/2022	T. JORGENSEN

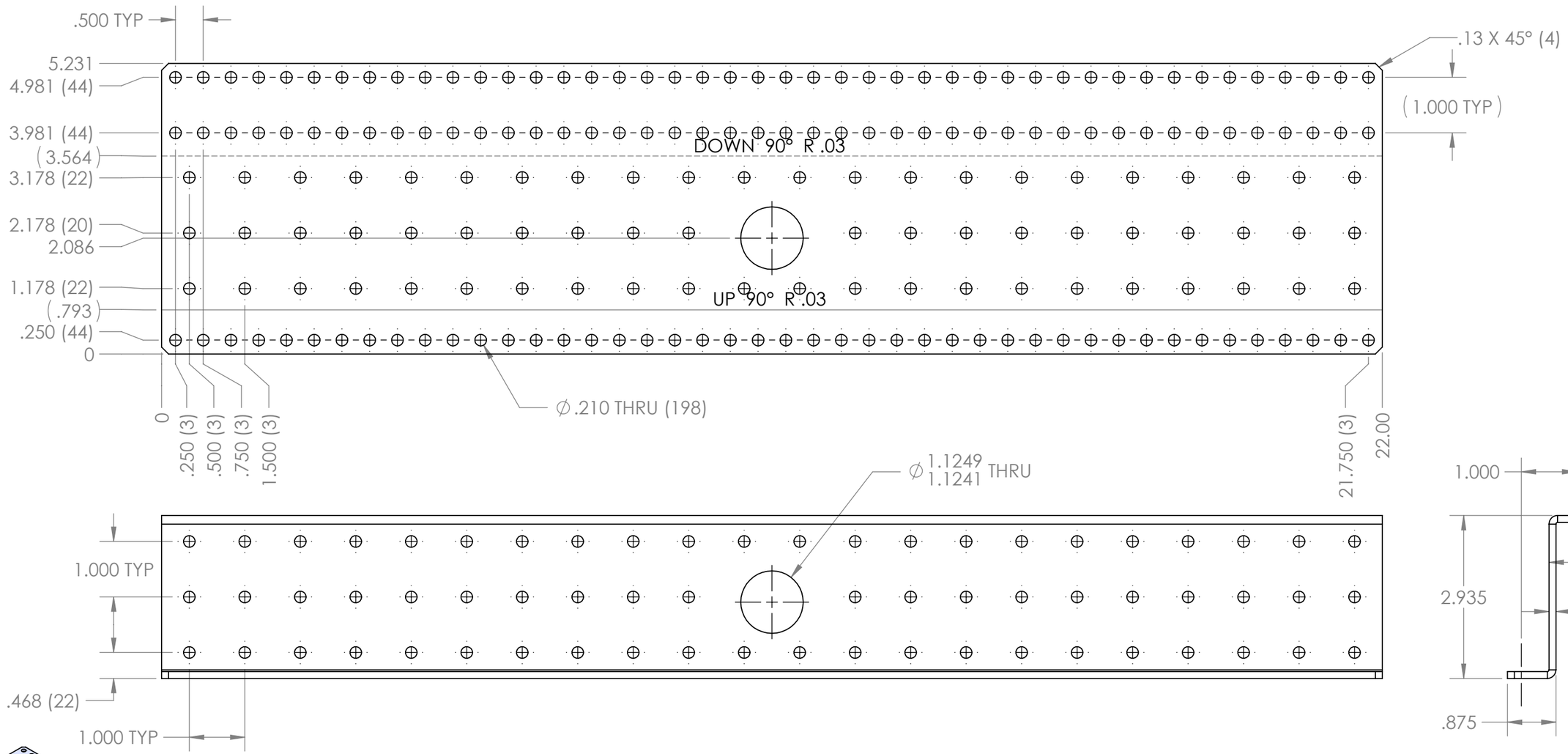

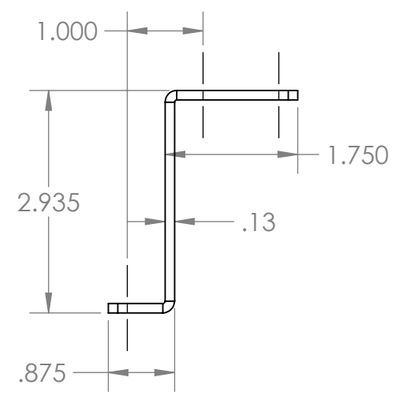

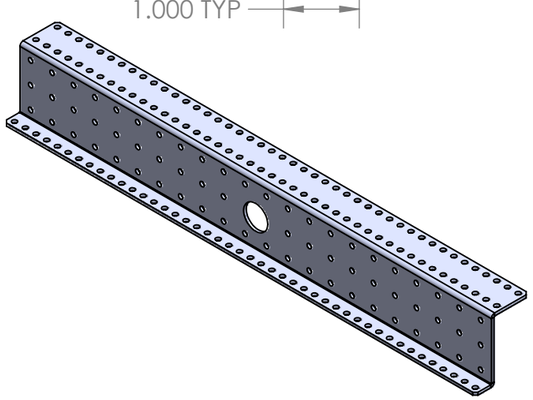

*** SEE CAD FOR ADDITIONAL TOOLPATH INFO***

UNLESS OTHERWISE SPECIFIED:	COMMENTS:		
DIMENSIONS ARE IN INCHES	DUAL DIMENSIONS ARE IN MILLIMETERS.		
TOLERANCES:	BREAK ALL SHARP EDGES.		
FRACTIONAL ±1/16			
ANGULAR: MACH ±1°			
ANGULAR: BEND ±5°			
ONE PLACE DECIMAL ±0.1			
TWO PLACE DECIMAL ±0.01			
THREE PLACE DECIMAL ±0.005			
FOUR PLACE DECIMAL ±0.0005			
MATERIAL 5052 AL		NAME	DATE
	CHECKED	NL	5/23/22
FINISH DEBURRED	ENG APPR.		
	MFG APPR.		
DO NOT SCALE DRAWING	Q.A.		

AndyMark

TITLE:

AM14U FAMILY CROSS PLATE

SIZE	DWG. NO.	REV
B	am-3974	2

SCALE: 1:2 SHEET 1 OF 1